INSET LIGHTS

TAXIWAY

- TAXIWAY CENTER LINE
- TAXIWAY EDGE
- STOPBAR
- INTERMEDIATE HOLDING POSITION

INTERTEC
AIRPORT DIVISION

TAXIWAY CENTER LINE STOPBAR INTERMEDIATE HOLDING POSITION

KEY FEATURES

- Ultra-Flat Propulsion – only 3.5mm above surface
- Fail open with automatic reset
- Pressure proof and maintenance free adhesive prism sealing
- Extreme Compact Design – compatible with halogen light shallow base

CONCEPTION

- Fully considers the environmental condition
- Minimizes the maintenance frequency
- Designed to last forever

DESIGN

- Adaptive optical system for maximum utilization of the LED performance
- Synchronous Driver Technology – no transformer, low inrush and high power factor
- Unique Sealing Technique – silicone sealing for prism installation using a special designed robotic assembling line
- Ultra-Durable Structure – forged aluminum alloy body with scratch-resistant prism
- Modular Design – universal components for all series, functions are only distinguished by LED light module

SERVICE LIFE

- LED Lifetime > 80,000 Hours
- Overall Design Life > 10 Years
- Maintenance Period > 2 Years

REGULATION

- ICAO Annex 14 Vol 1, 8th Edition
- Aerodrome Design Manual
- CAAC-AC-137-CA-2015-01~04
- EASA CS-ADR-DSN
- FAA AC150/5345-46E

COLOR COORDINATES

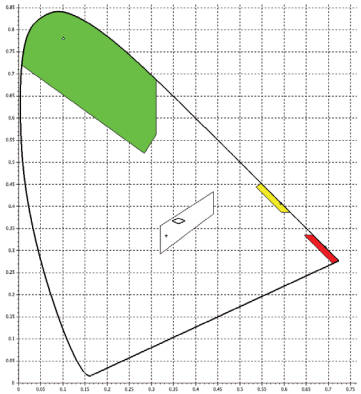

OPTICAL

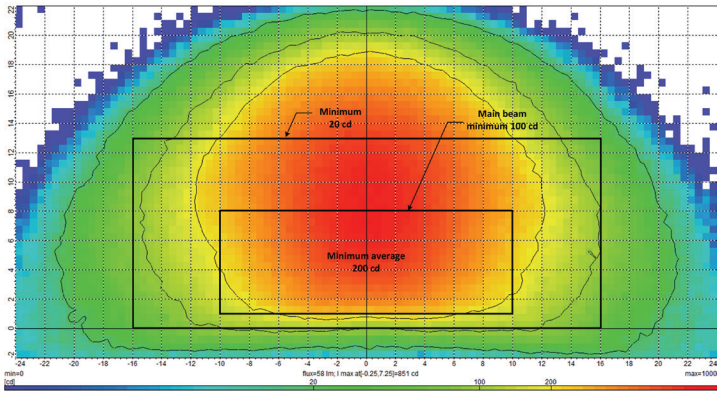

I8-T-1-S-G-G

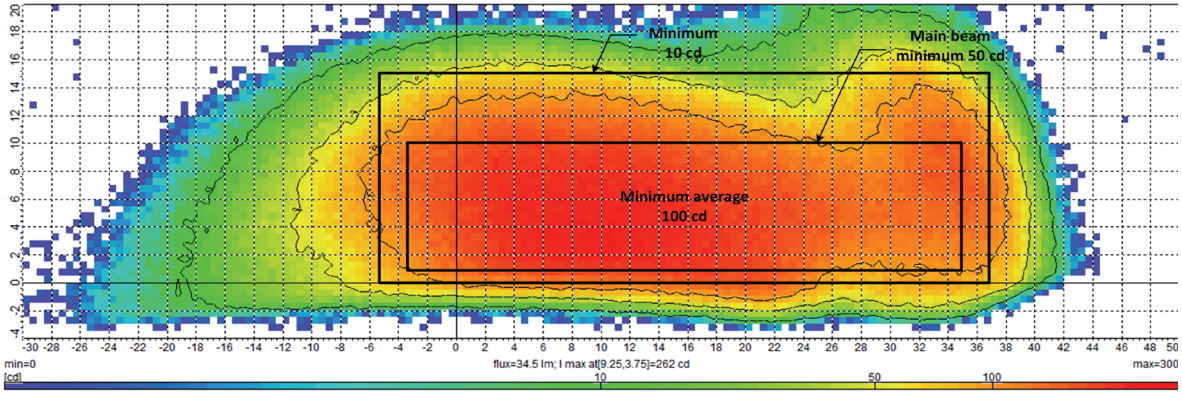

I8-T-2-C-G-G

TECHNICAL DATA

Mechanics		
Diameter	203mm	
Flange Thickness	19mm	
Height above Surface	3.5mm	
Depth below Flange	60mm	
Net Weight	2.8kg	
Mounting	2×M10×30	
Static Load Resistance	20t	
Dynamic Load Resistance	40J	
Shear Load Resistance	1.7t	
Packing Dimensions	245×245×135mm	
Gross Weight	3.1kg	
Environmental		
Operating Temperature	-50°C – +55°C (Device must be always active)	
Storage Temperature	-40°C – +85°C	
Solar Radiation	1.5kW/m²	
Vibration Resistance	IEC 60068-2-6	
Protection Class (Dust /Liquids)	IP68 (IEC69598-1)	
Humidity	0 – 100%	
Electrical		
Connection	FAA L823 Style 1 or 2 Connector	
Power Input	2.8 – 6.6Aeff AC	
Sinewave CCR	Ipeak max = 9.88A	
Thyristor CCR	Ipeak max = 12.60A, φmin = 45°	
Power-Factor (nominal)	>0.97	
Power Consumption (nominal)	Taxiway Center Line – Green	<7.0W
	Taxiway Center Line – Yellow	<6.0W
	Stopbar – Red	<6.0W
	Taxiway Center Line – Yellow/Green	<9.0W
	Taxiway Center Line – Yellow/ Yellow	<9.0W
	Taxiway Center Line – Green/Green	<10.0W
Fail Open	Reaction on	Output Open Circuit
		Output Short Circuit
		Overheating
Thermal Protection	85°C < LED-PCB Temp < 100°C	Linear Derating
	LED-PCB Temp > 105°C	Shutdown & Fail Open
Thermal Degradation Compensation	Luminous Flux @ -40°C – +70°C (LED-PCB Temp)	± 5%
EMC Protection	Emission	IEC 61000-2
	Immunity	IEC 61000-4

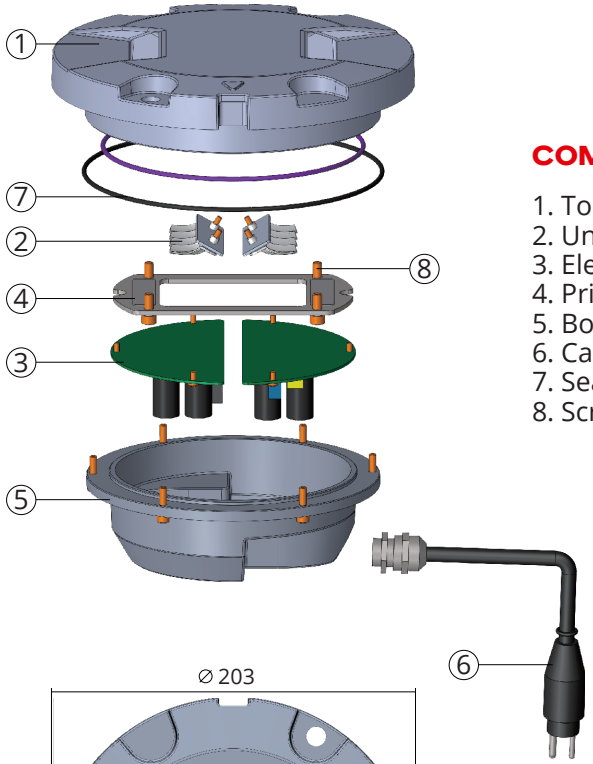

COMPONENTS

1. Top part
2. Uni-directional Optic Module
3. Eletrical Driver
4. Prism Holder
5. Bottom Pan
6. Cable Package
7. Sealing Package
8. Screw Package

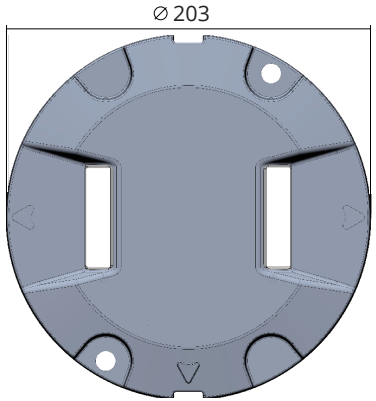

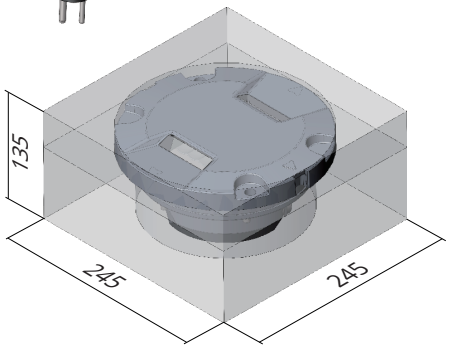

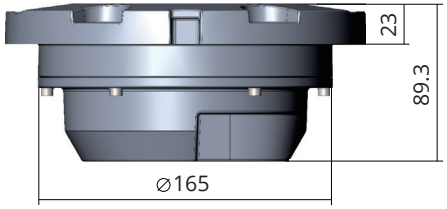

PACKAGE DIMENSIONS

Net Weight: 2.8kg
Gross Weight: 3.1kg

TAXIWAY EDGE

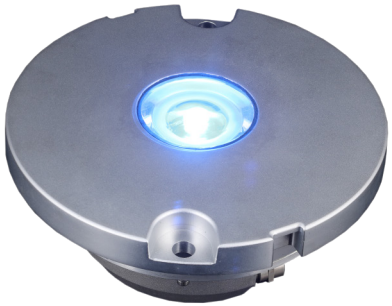

KEY FEATURES

- Ultra-Flat Propulsion – only 3.5mm above surface
- Fail open with automatic reset
- Extreme Compact Design – compatible with halogen light shallow base

CONCEPTION

- Fully considers the environmental condition
- Minimizes the maintenance frequency
- Designed to last forever

DESIGN

- Adaptive optical system for maximum utilization of the LED performance
- Synchronous Driver Technology – no transformer, low inrush and high power factor
- Unique Sealing Technique – silicone sealing for prism installation using a special designed robotic assembling line
- Ultra-Durable Structure – forged aluminum alloy body with scratch-resistant prism
- Modular Design – universal components for all series, functions are only distinguished by LED light module

SERVICE LIFE

- LED Lifetime > 80,000 Hours
- Overall Design Life > 10 Years
- Maintenance Period > 2 Years

REGULATION

- ICAO Annex 14 Vol 1, 8th Edition
- Aerodrome Design Manual
- CAAC-AC-137-CA-2015-01 04
- EASA CS-ADR-DSN
- FAA AC150/5345-46E

COLOR COORDINATES

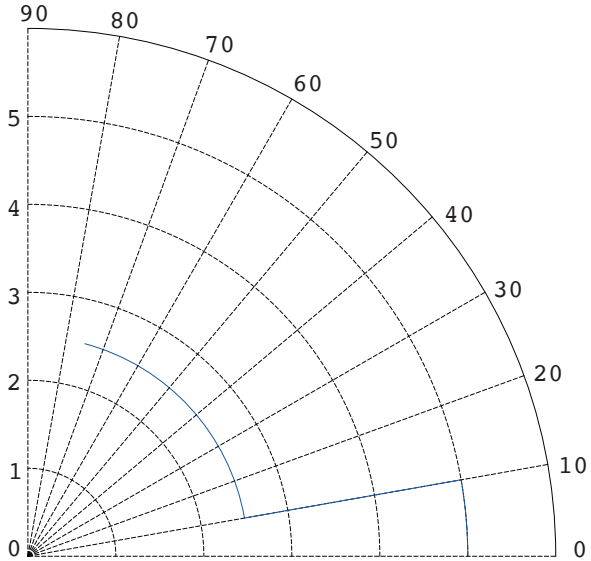

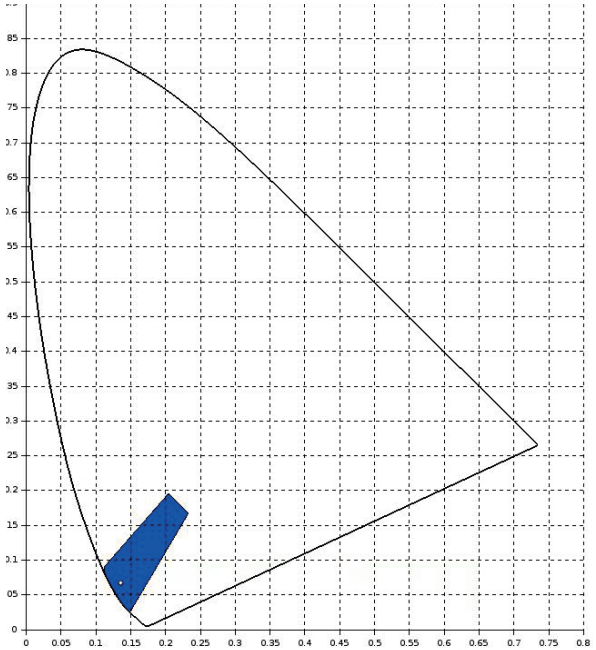

TECHNICAL DATA

Mechanics		
Diameter	203mm	
Flange Thickness	19mm	
Height above Surface	3.5mm	
Depth below Flange	66.5mm	
Net Weight	2.8kg	
Mounting	2×M10×30	
Static Load Resistance	14t	
Dynamic load Resistance	40J	
Shear Load Resistance	1.7t	
Packing Dimensions	245×245×135mm	
Packing Dimensions	245×245×135mm	
Environmental		
Operating Temperature	-50°C – +55°C (Device must be always active)	
Storage Temperature	-40°C – +85°C	
Solar Radiation	1.5kW/m²	
Vibration Resistance	IEC 60068-2-6	
Protection Class (Dust/Liquids)	IP68 (IEC69598-1)	
Humidity	0 – 100%	
Electrical		
Connection	FAA L823 Style 1 Connector	
Power Input	2.8 – 6.6Aeff AC	
Sinewave CCR	Ipeak max = 9.88A	
Thyristor CCR	Ipeak max = 12.60A, φmin = 45°	
Power-Factor (nominal)	>0.97	
Power Consumption (nominal)	Blue	<3.0W
EMC Protection	Emission	IEC 61000-2
	Immunity	IEC 61000-4

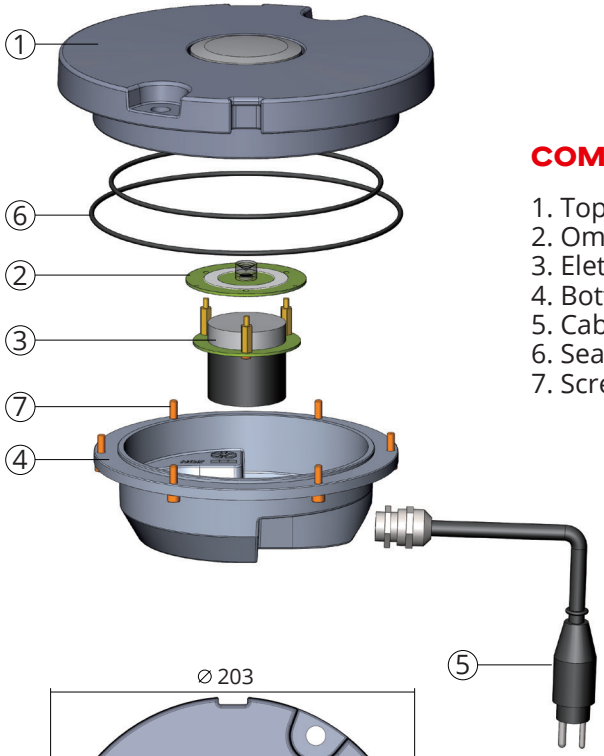

COMPONENTS

1. Top Part
2. Omni Optic Module
3. Eletrical Driver
4. Bottom Pan
5. Cable Package
6. Sealing Package
7. Screw Package

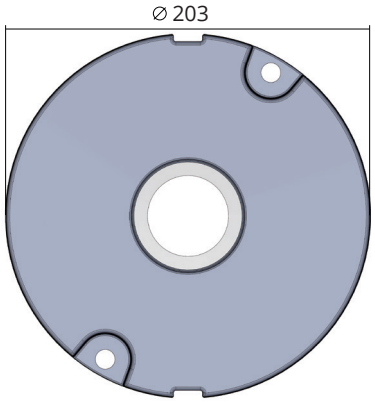

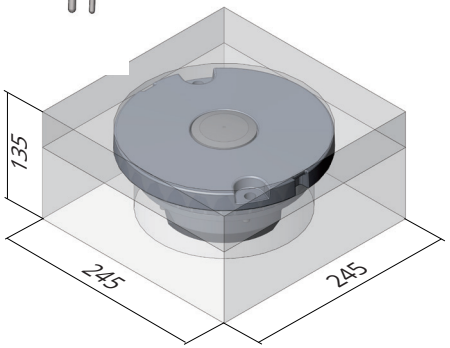

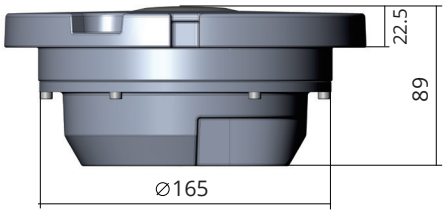

PACKAGE DIMENSIONS

Net Weight: 2.8kg
Gross Weight: 3.1kg

ORDER CODES

ORDER EXAMPLE

I8	TC	2	C	G	Y

Inset light 8”	I8

Light Type

Taxiway CL	TC
Taxiway Edge	TE
Stopbar	S
Intermediate Holding Position	I

Cables

1	1
2	2

Direction

Straight	S
Curve	C
Omni dir.	O

Channel 1

Green	G
Yellow	Y
Red	R
Blue	B
Blank	O

Channel 2

Green	G
Yellow	Y
Red	R
Blue	B
Blank	O

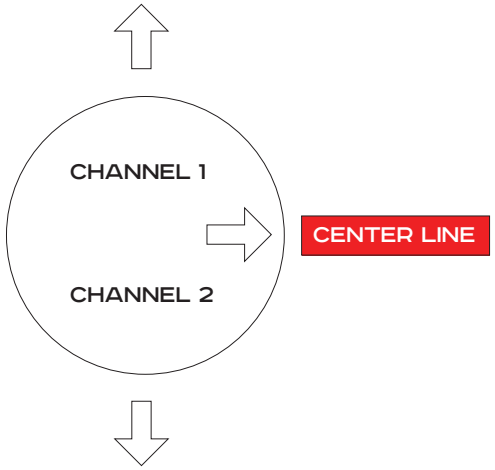

OUR AIRPORT’S ORDER CODES

APPLICATION	ORDER CODES					
Taxiway Center Line						
Taxiway Edge						
Stopbar						
Intermediate Holding Position						

OPTIONS

ACCESSORIES AND INSTALLATION MATERIALS

BASE PLATES, SHALLOW BASES AND ADAPTOR RINGS
INTERTEC'S airfield lighting program also includes a complete range of base plates, shallow bases and adaptor rings. With our specially designed adaptor rings, it is possible to reduce the propulsion of the inset lights, so it is flush with the surface to minimize damage from snow ploughs, push-back vehicles, etc.

BOLTS & WASHERS
During installation and maintenance, everything from missing one of the two washers, no washer at all, wrong sided assembly or even no screw at all, can occur. With this in mind, and based on actual incidents, The Federal Aviation Administration (FAA) announced in their CertAlert referring to AC 150/5340-26, 30 and EB 83 that "... it is highly recommended to use safety washers and screws in a color not commonly used in airports". Based on this statement and a few more steps towards Poka Yoke & Continuous Improvements practice, we have developed a combined bolt & washer solution, which can make the difference between a major incident or no incidents at all.

CABLES AND TRANSFORMERS
Regardless of size and dimensions, INTERTEC supplies a full range of cables and transformers to suit the project and the installation.

CONSTANT CURRENT REGULATOR
The Constant Current Regulators (CCR) are built with a high degree of reliability which results in a low level of maintenance. The CCR's are fitted with the latest technology and are ideal solutions for both LED applications as well as conventional lamps.

CONTROL SYSTEM

INTERTEC AIRPORT DIVISION supplies, installs and services high quality communication systems, such as:
- Control systems integrating airside equipment such as NAV/COM, MET, AGL, AFTN, ATIS, etc.
- Airfield remote control and monitoring systems, ARCAMS
- Individual lamp control and monitoring systems, ILCAMS
- Pilot activated lighting, PAL
- Preventive maintenance systems
- Event and alarm systems

With airfield remote control and monitoring systems, ARCAMS, it is possible to control and monitor the airfield ground lighting (AGL) systems. Combined with an individual lamp control and monitoring system, ILCAMS, the lighting system can be monitored and controlled individually, which ensures fast maintenance and thus improves efficient operation of the airport.
With pilot activated lighting, PAL, aircraft pilots are able to control the lighting of an airport. Via radio, the pilot can turn on the airfield lights and select different intensity steps by keying the microphone of the aircraft communication transmitter in intervals.

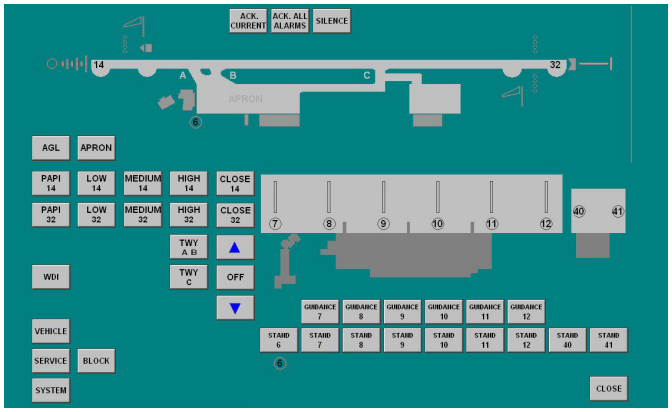

INSTALLATION AND SERVICE

INTERTEC AIRPORT DIVISION has many years' experience within a wide range of technical airport installations in both the Scandinavian and international markets.
Our installations include equipment and services essential for modern airport operations such as airfield lighting, MET systems, NAV-Aids, remote control systems, power supply and distribution as well as communication networks.
INTERTEC can provide the following additional services for our airfield lighting turnkey projects:
- Sequential flash light systems
- Tailor made lamp solutions
- Solar powered airfield lighting
- Frangible masts for approach, wind cone, etc.

Furthermore, INTERTEC can provide tailor made service solutions to ensure that the installation is well maintained and performing according to the specifications.

PLEASE DO NOT HESITATE TO CONTACT US IF YOU HAVE ANY ADDITIONAL REQUIREMENTS, SO WE CAN PROPOSE A SOLUTION THAT MEETS YOUR EXPECTATIONS.

INTERTEC
AIRPORT DIVISION

INTERTEC A/S - Fiskergade 66 - PO Box 239 - DK-8100 Aarhus C - Denmark - CVR NO: 27672167
Telephone: +45 8732 3400 - Telefax: +45 8732 3401 - intertec@intertec.dk - www.intertec.dk