ELEVATED LIGHTS

CAT I - II - III

- THRESHOLD / RUNWAY END
- RUNWAY GUARD LIGHT
- APPROACH
- THRESHOLD
- RUNWAY END
- STOPBAR
- TAXIWAY EDGE
- RUNWAY EDGE

INTERTEC
AIRPORT DIVISION

THRESHOLD / RUNWAY END RUNWAY GUARD LIGHT APPROACH THRESHOLD RUNWAY END STOPBAR

COLOR COORDINATES

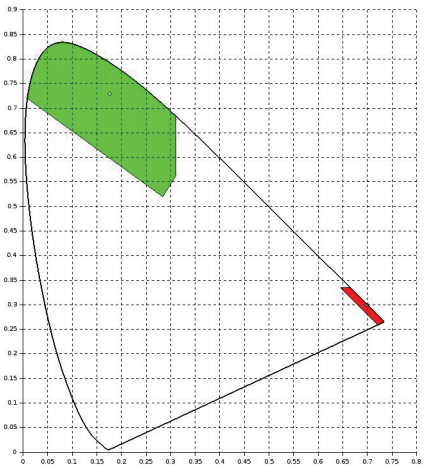

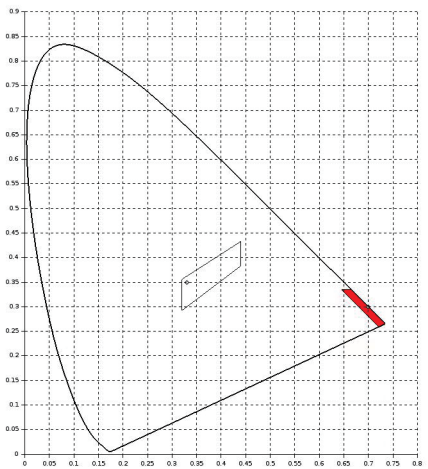

KEY FEATURES

- Fail open with automatic reset
- Independent triaxial angle adjustment with laser calibration

CONCEPTION

- Fully considers the environmental condition
- Minimizes the maintenance frequency
- Designed to last forever

DESIGN

- Adaptive optical system for maximum utilization of the LED performance
- Synchronous Driver Technology – no transformer, low inrush and high power factor
- Unique Sealing Technique – silicone sealing for prism installation using a special designed robotic assembling line
- Ultra-Durable Structure – aluminum casting housing with scratch-resistant cover lens
- Modular Design – universal components for all series, functions are only distinguished by LED light module

SERVICE LIFE

- LED Lifetime > 80,000 Hours
- Overall Design Life > 10 Years
- Maintenance Period > 2 Years

REGULATION

- ICAO Annex 14 Vol 1, 8th Edition
- Aerodrome Design Manual
- CAAC-AC-137-CA-2015-01~04
- EASA CS-ADR-DSN
- FAA AC150/5345-46E

OPTICAL

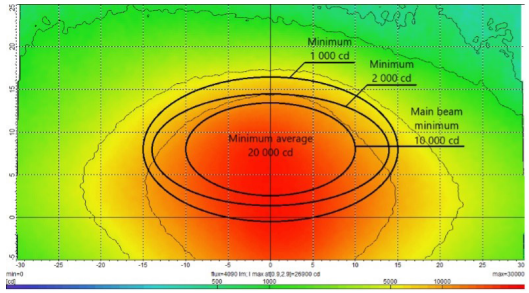

Approach
EP-A-1-U-C-O

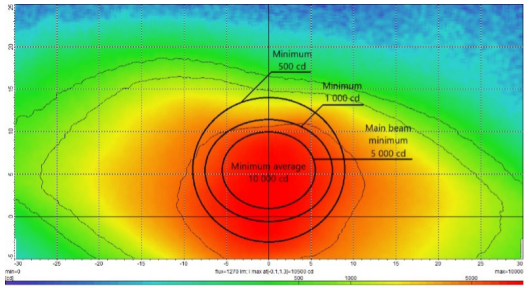

Threshold
EB-H-1-U-G-O

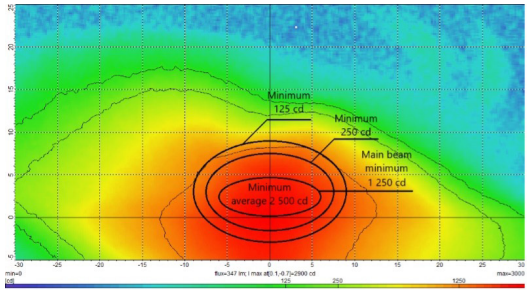

Runway End
EB-E-1-U-R-O

TECHNICAL DATA

Mechanics		
Width	153mm	
Height	239mm (incl. frangible coupling – 309 mm)	
Net Weight	2.9kg	
Mounting	3×M10×30	
Packing Dimensions	302×250×203mm	
Gross Weight	3.2kg	
Environmental		
Operating Temperature	-50°C – +55°C (Device must be always active)	
Storage Temperature	-40°C – +85°C	
Solar Radiation	1.5kW/m²	
Protection Class (Dust /Liquids)	IP68 (IEC69598-1)	
Humidity	0-100%	
Electrical		
Connection	FAA L823 Style 1 or 2 Connector	
Power Input	2.8 – 6.6Aeff AC	
Sinewave CCR	Ipeak max = 9.88A	
Thyristor CCR	Ipeak max = 12.60A, φmin = 45°	
Power-Factor (nominal)	>0.97	
Power Consumption (nominal)	Approach – White	<30.0W
	Runway End – Red	<10.0W
	Threshold – Green	<24.0W
Fail Open	Reaction on	Output Open Circuit
		Output Short Circuit
		Overheating
Thermal Protection	85°C < LED-PCB Temp < 100°C	Linear Derating
	LED-PCB Temp > 105°C	Shutdown & Fail Open
Thermal Degradation Compensation	Luminous Flux @ -40°C – +70°C (LED-PCB Temp)	± 5%
EMC Protection	Emission	IEC 61000-2
	Immunity	IEC 61000-4

COMPONENTS

1. Top part
2. Uni-directional Optic Module
3. Eletrical Driver
4. Bottom Pan
5. Installation Kit
6. Cable Package
7. Sealing Package
8. Screw Package

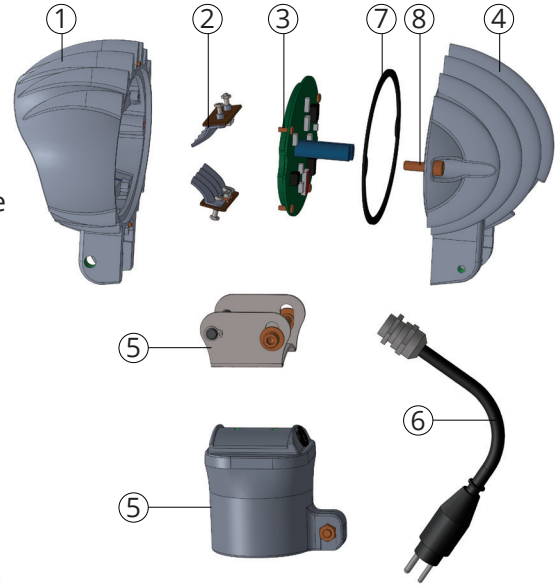

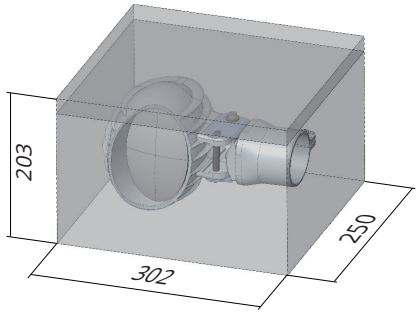

PACKAGE DIMENSIONS

Net Weight: 2.9kg
Gross Weight: 3.2kg

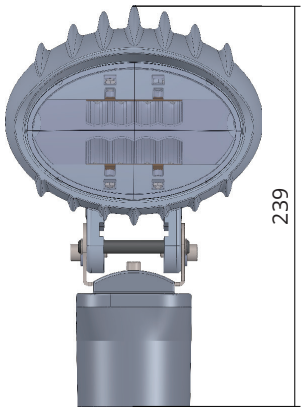

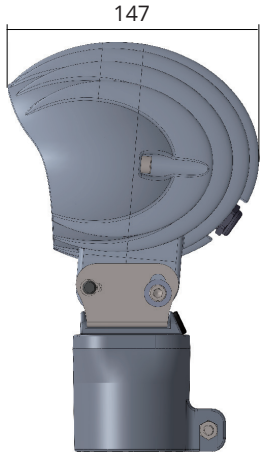

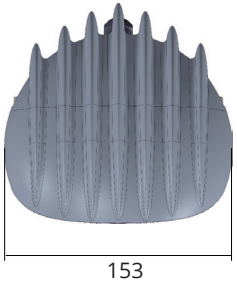

TAXIWAY EDGE

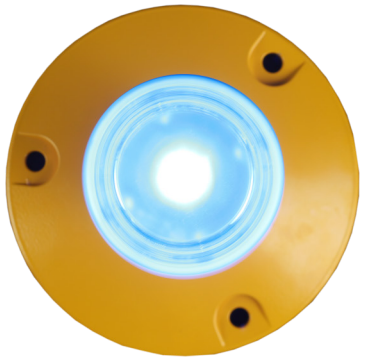

KEY FEATURES

- Simple structure avoids accumulation of dust and water
- Complete sealing - effectively increases the service life
- Fail open with automatic reset

CONCEPTION

- Fully considers the environmental condition
- Minimizes the maintenance frequency
- Designed to last forever

DESIGN

- Adaptive optical system for maximum utilization of the LED performance
- Unique Sealing Technique – silicon sealing for prism installation using a special designed robotic assembly line
- Ultra-Durable Structure – aluminum alloy housing with UV-resistant PC

SERVICE LIFE

- LED Lifetime > 80,000 Hours
- Overall Design Life > 10 Years

REGULATION

- ICAO Annex 14 Vol 1, 8th Edition
- Aerodrome Design Manual
- CAAC-AC-137-CA-2015-01 04
- EASA CS-ADR-DSN
- FAA AC150/5345-46E

COLOR COORDINATES

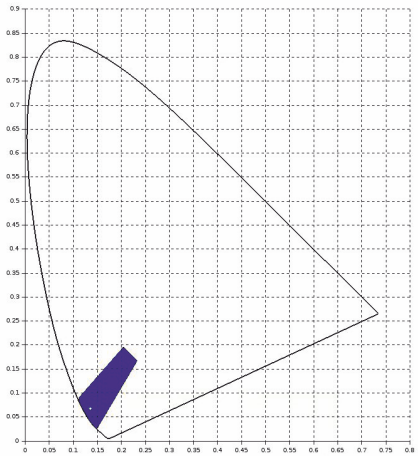

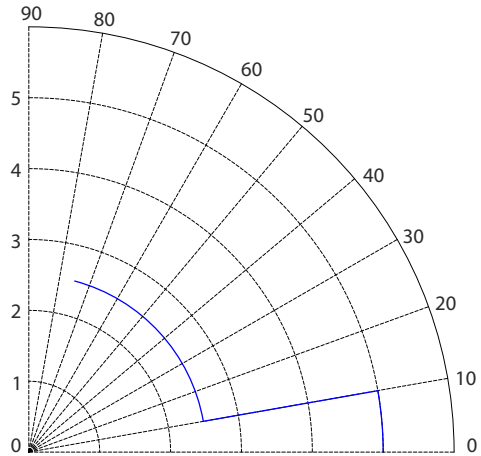

TECHNICAL DATA

Mechanics		
Diameter	75.5mm	
Height	118mm (incl. frangible coupling – 191 mm)	
Net Weight	0.66kg	
Packing Dimensions	245 x 245 x 135mm (2 in 1 package)	
Gross Weight	1.5kg (2 in 1 package)	
Environmental		
Operating Temperature	-50°C – +55°C (Device must be always active)	
Storage Temperature	-40°C – +85°C	
Solar Radiation	1.5kW/m²	
Protection Class (Dust/Liquids)	IP68 (IEC69598-1)	
Humidity	0 – 100%	
Electrical		
Connection	FAA L823 Style 1 Connector	
Power Input	2.8 – 6.6Aeff AC	
Sinewave CCR	Ipeak max = 9.88A	
Thyristor CCR	Ipeak max = 12.60A, φmin = 45°	
Power-Factor (nominal)	>0.97	
Power Consumption (nominal)	Blue	<3.0W
EMC Protection	Emission	IEC 61000-2
	Immunity	IEC 61000-4

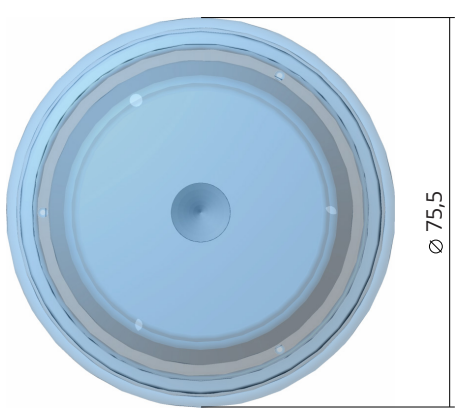

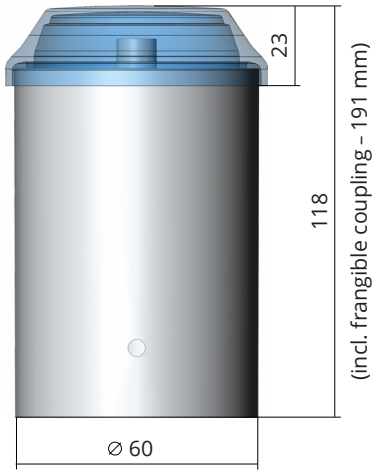

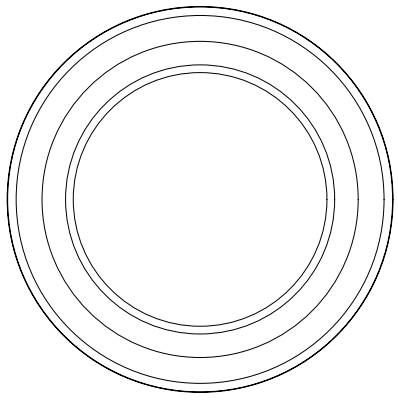

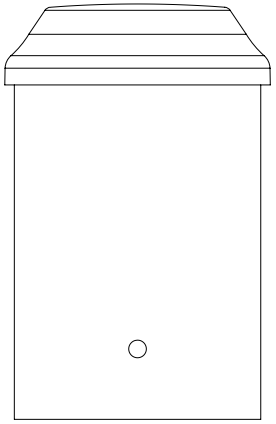

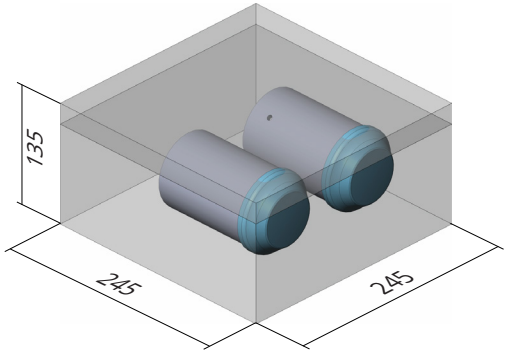

PACKAGE DIMENSIONS

Net Weight: 0.66kg
Gross Weight: 1.5kg

RUNWAY EDGE

KEY FEATURES

- Equipped with omni-directional guiding function
- Optional Infrared Signal – compatible with Enhanced Vision System
- Fail open with automatic reset

CONCEPTION

- Fully considers the environmental condition
- Minimizes the maintenance frequency
- Designed to last forever

DESIGN

- Adaptive optical system for maximum utilization of the LED performance
- Synchronous Driver Technology - no transformer, low inrush and high-power factor
- Unique Sealing Technique – silicon sealing for prism installation using a special designed robotic assembly line
- Ultra-Durable Structure – aluminum casting housing with UV-resistant PC
- Modular Design – universal components for all series, functions are only distinguished by LED light module

SERVICE LIFE

- LED Lifetime > 80,000 Hours
- Overall Design Life > 10 Years
- Maintenance Period > 2 Years

REGULATION

- ICAO Annex 14 Vol 1, 8th Edition
- Aerodrome Design Manual 9157
- CAAC-AC-137-CA-2015-01 04
- EASA CS-ADR-DSN
- FAA AC150/5345-46E

COLOR COORDINATES

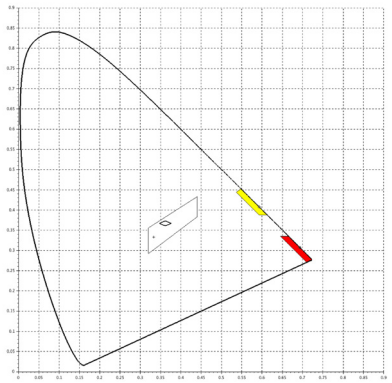

OPTICAL

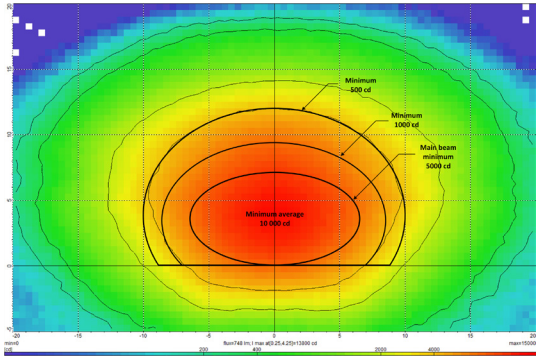

EB-R-1-0-C-C

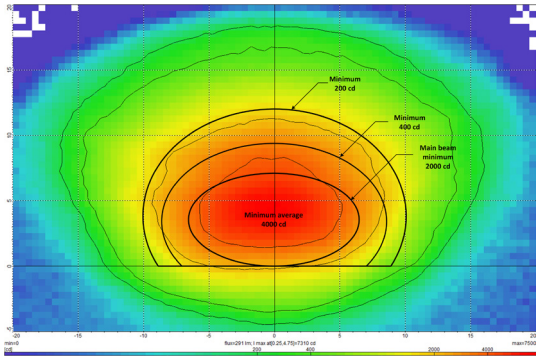

EB-R-1-O-Y-Y

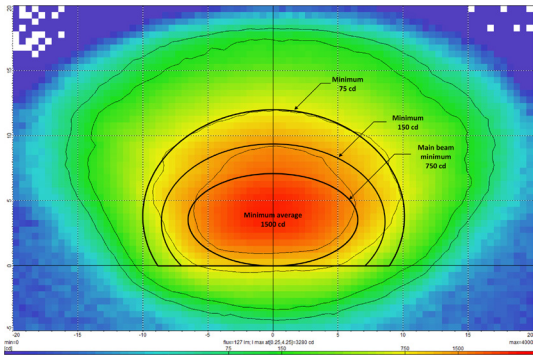

EB-R-1-O-R-R

TECHNICAL DATA

Mechanics		
Diameter	173.4mm	
Height	253mm (incl. frangible coupling – 313 mm)	
Net Weight	3.0kg	
Packing Dimensions	350 x 218 x 216mm	
Gross Weight	3.3kg	
Environmental		
Operating Temperature	-50°C – +55°C (Device must be always active)	
Storage Temperature	-40°C – +85°C	
Solar Radiation	1.5kW/m²	
Protection Class (Dust/Liquids)	IP68 (IEC69598-1)	
Humidity	0 – 100%	
Electrical		
Connection	FAA L823 Style 1 Connector	
Power Input	2.8 – 6.6Aeff AC	
Sinewave CCR	Ipeak max = 9.88A	
Thyristor CCR	Ipeak max = 12.60A, φmin = 45°	
Power-Factor (nominal)	>0.97	
Power Consumption (nominal)	Runway Edge – Red	<10.0W
	Runway Edge – White/Yellow	<18.0W
	Runway Edge – White/White	<27.0W
	Runway Edge – White/Red	<<16.0W
Fail Open	Reaction on	Output Open Circuit
		Output Short Circuit
		Overheating
Thermal Protection	85°C < LED-PCB Temp < 100°C	Linear Derating
	LED-PCB Temp > 105°C	Shutdown & Fail Open
Thermal Degradation Compensation	Luminous Flux @ -40°C – +70°C (LED-PCB Temp)	± 5%
EMC Protection	Emission	IEC 61000-2
	Immunity	IEC 61000-4

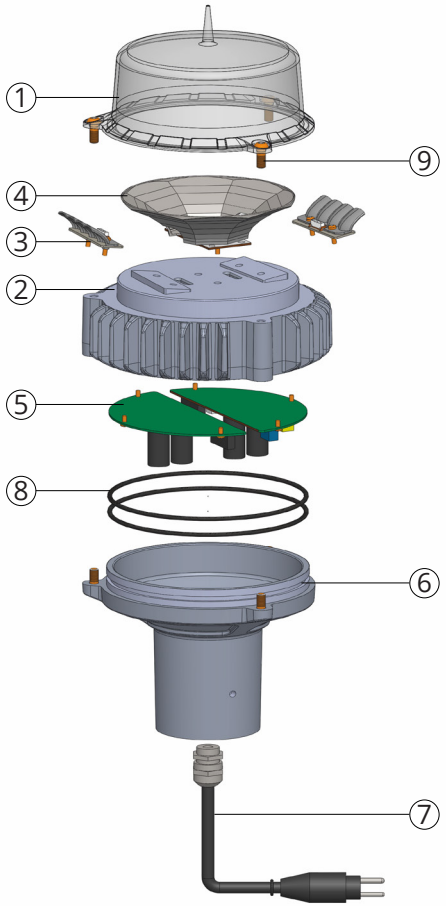

COMPONENTS

1. PC Dome
2. Top Part
3. Uni-directional Optic Module
4. Omni Optic Module
5. Electrical Driver
6. Bottom Pan
7. Cable Package
8. Sealing Package
9. Screw Package

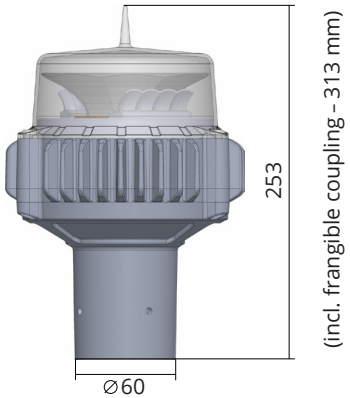

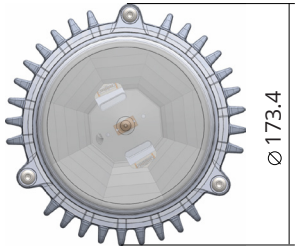

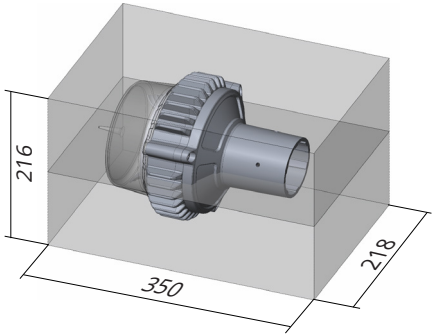

PACKAGE DIMENSIONS

Net Weight: 3.0kg
Gross Weight: 3.3kg

ORDER CODES

ORDER EXAMPLE

EP	A	1	U	C	O

Elevated light for pole	EP
Elevated light with frangible coupling	EB

Light Type

Taxiway	T
Runway	R
Threshold	H
Runway End	E
Threshold (L, R)/Runway End	H(-)E
Approach	A
Stopbar	S
Runway Guard light	RGL

Cables

1	1
2	2

Direction

Uni dir. (1 beam)	U
Bi dir. (2 beams)	B
Omni dir.	O

Channel 1

Clear	C
Green	G
Yellow	Y
Red	R
Blue	B
Blank	O

Channel 2

Clear	C
Green	G
Yellow	Y
Red	R
Blue	B
Blank	O

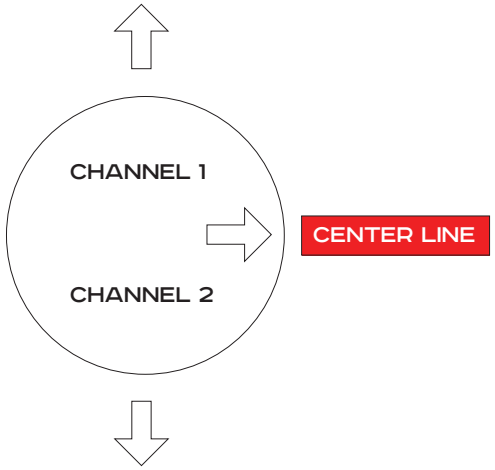

OUR AIRPORT'S ORDER CODES

APPLICATION	ORDER CODES					
Threshold / Runway End						
Runway Guard light						
Approach						
Threshold						
Runway End						
Stopbar						
Taxiway Edge						
Runway Edge						

ACCESSORIES AND INSTALLATION MATERIALS

BASE PLATES, SHALLOW BASES AND ADAPTOR RINGS

INTERTEC'S airfield lighting program also includes a complete range of base plates, shallow bases and adaptor rings. With our specially designed adaptor rings, it is possible to reduce the propulsion of the inset lights, so it is flush with the surface to minimize damage from snow ploughs, push-back vehicles, etc.

BOLTS & WASHERS

During installation and maintenance, everything from missing one of the two washers, no washer at all, wrong sided assembly or even no screw at all, can occur. With this in mind, and based on actual incidents, The Federal Aviation Administration (FAA) announced in their CertAlert referring to AC 150/5340-26, 30 and EB 83 that "... it is highly recommended to use safety washers and screws in a color not commonly used in airports". Based on this statement and a few more steps towards Poka Yoke & Continuous Improvements practice, we have developed a combined bolt & washer solution, which can make the difference between a major incident or no incidents at all.

CABLES AND TRANSFORMERS

Regardless of size and dimensions, INTERTEC supplies a full range of cables and transformers to suit the project and the installation.

CONSTANT CURRENT REGULATOR

The Constant Current Regulators (CCR) are built with a high degree of reliability which results in a low level of maintenance. The CCR's are fitted with the latest technology and are ideal solutions for both LED applications as well as conventional lamps.

CONTROL SYSTEM

INTERTEC AIRPORT DIVISION supplies, installs and services high quality communication systems, such as:

- Control systems integrating airside equipment such as NAV/COM, MET, AGL, AFTN, ATIS, etc.
- Airfield remote control and monitoring systems, ARCAMS
- Individual lamp control and monitoring systems, ILCAMS
- Pilot activated lighting, PAL
- Preventive maintenance systems
- Event and alarm systems

With airfield remote control and monitoring systems, ARCAMS, it is possible to control and monitor the airfield ground lighting (AGL) systems.

Combined with an individual lamp control and monitoring system, ILCAMS, the lighting system can be monitored and controlled individually, which ensures fast maintenance and thus improves efficient operation of the airport.

With pilot activated lighting, PAL, aircraft pilots are able to control the lighting of an airport. Via radio, the pilot can turn on the airfield lights and select different intensity steps by keying the microphone of the aircraft communication transmitter in intervals.

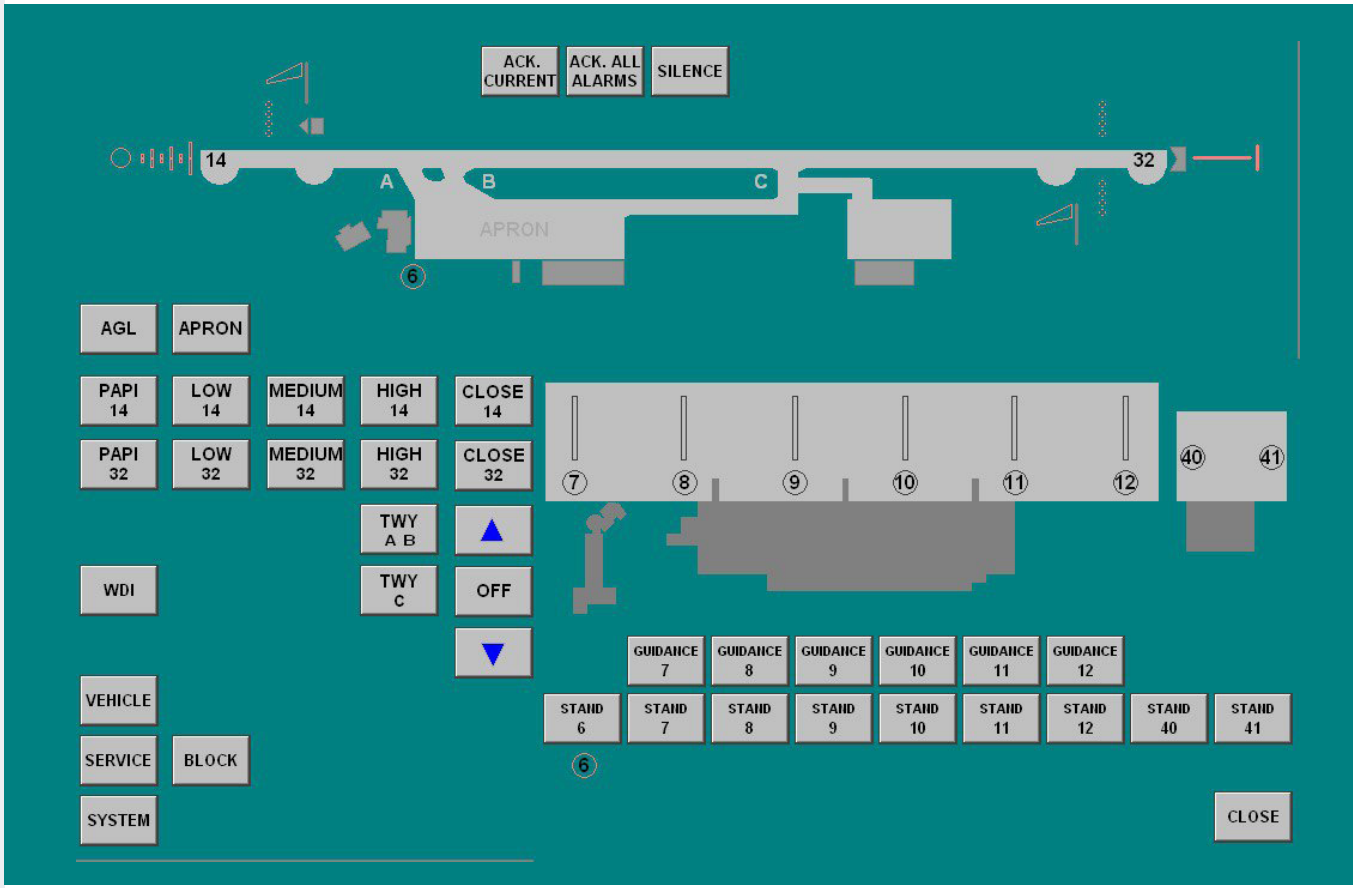

INSTALLATION AND SERVICE

INTERTEC AIRPORT DIVISION has many years' experience within a wide range of technical airport installations in both the Scandinavian and international markets.

Our installations include equipment and services essential for modern airport operations such as airfield lighting, MET systems, NAV-Aids, remote control systems, power supply and distribution as well as communication networks.

INTERTEC can provide the following additional services for our airfield lighting turnkey projects:

- Sequential flash light systems
- Tailor made lamp solutions
- Solar powered airfield lighting
- Frangible masts for approach, wind cone, etc.

Furthermore, INTERTEC can provide tailor made service solutions to ensure that the installation is well maintained and performing according to the specifications.

PLEASE DO NOT HESITATE TO CONTACT US IF YOU HAVE ANY ADDITIONAL REQUIREMENTS, SO WE CAN PROPOSE A SOLUTION THAT MEETS YOUR EXPECTATIONS.

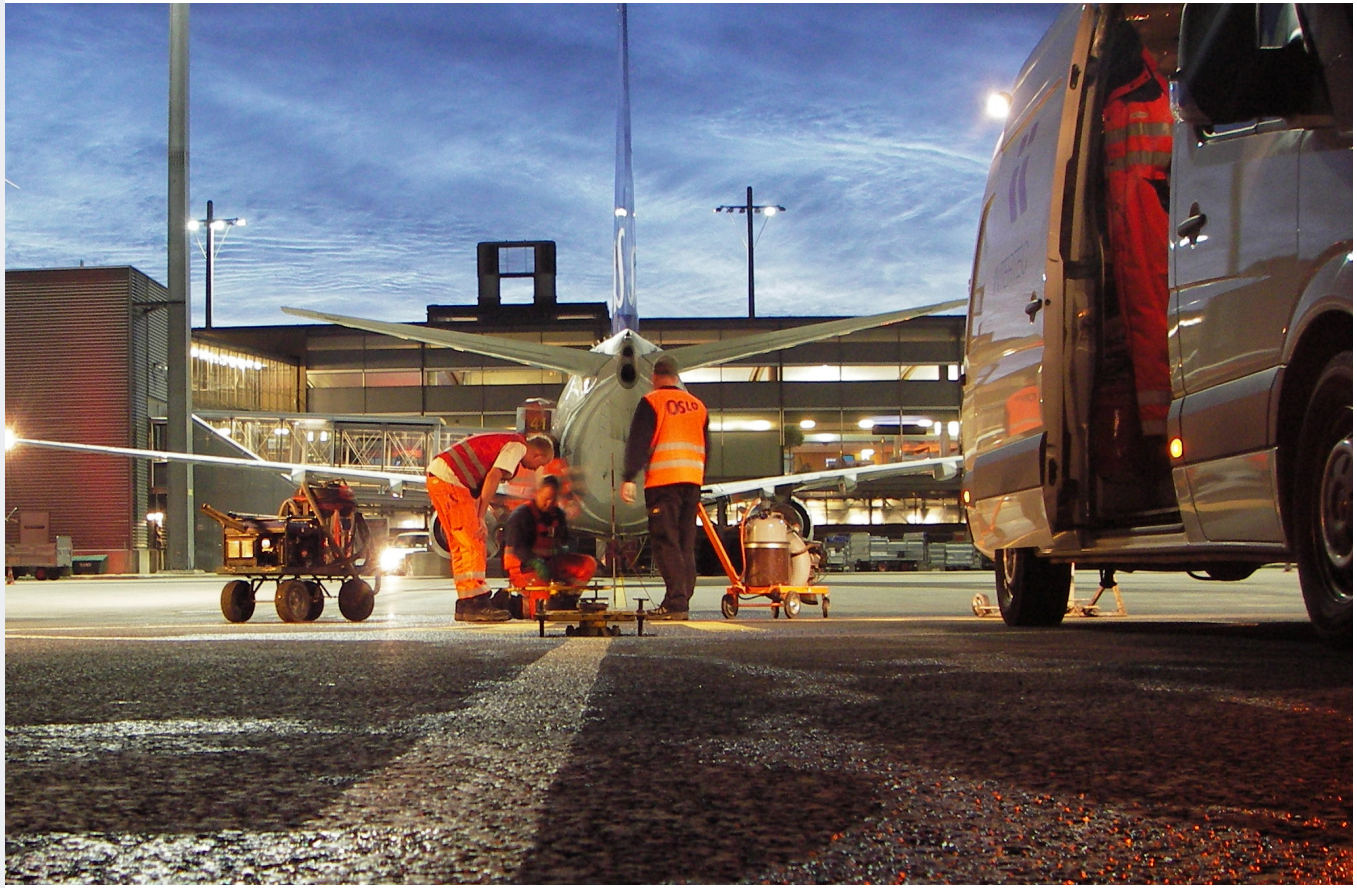

INTERTEC
AIRPORT DIVISION

INTERTEC A/S - Fiskergade 66 - PO Box 239 - DK-8100 Aarhus C - Denmark - CVR NO: 27672167
Telephone: +45 8732 3400 - Telefax: +45 8732 3401 - intertec@intertec.dk - www.intertec.dk